THE ALFRESCO FACTORY

ALFRESCO Wildfire

SPECIFICATIONS - Original Model

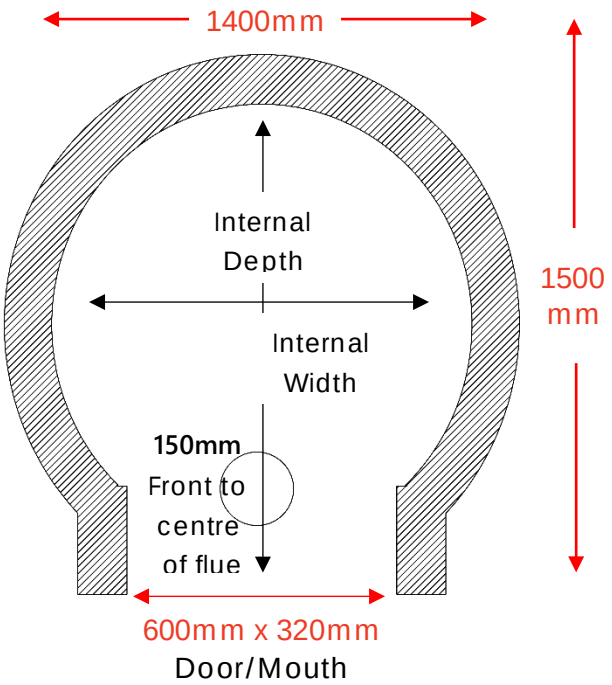

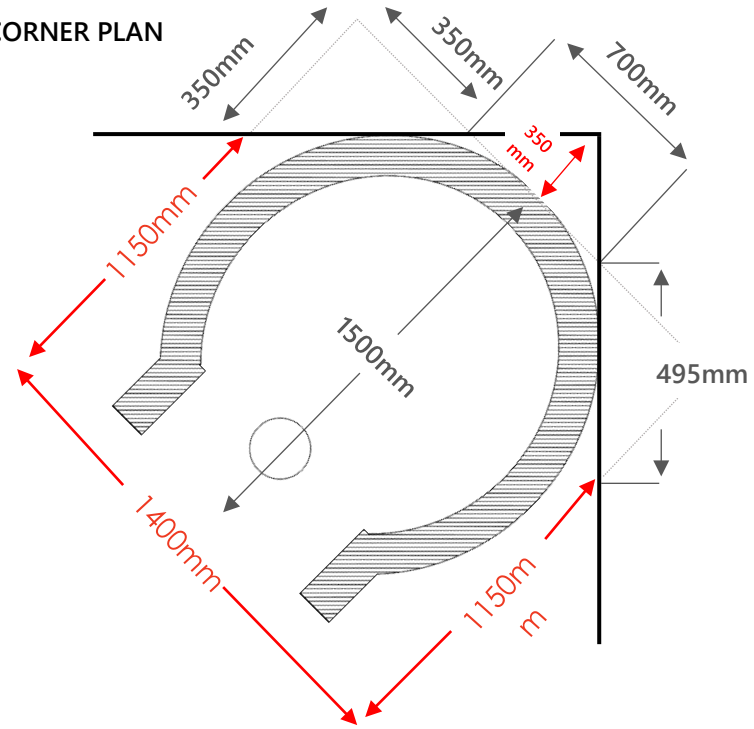

OVEN SPECS OVERVIEW

External Measurements

External width: 1400mm

External depth: 1500mm

External height: ≈700mm

Internal Measurements

Internal width: 1100mm

Internal depth: 1280mm

Internal height: 470mm

Door/Mouth Measurements

Width: 600mm

Height: 320mm

Stainless Steel Flue Measurements

Length: 1000mm

Diameter: 6" (approx 152mm)

Weight

Completed unit (*including slab*) ≈1100kg

DIY kit (*no slab*) ≈800kg

BASE CONSTRUCTION ORIGINAL MODEL

Slab dimensions for completed oven – 1400mm wide x 1500mm deep x 65mm thick*

**Slab is provided with completed ovens only. If making your own slab we recommend 100mm reinforced concrete.*

NOTE *Bench and wall heights are a guide only – you can build your base to whatever height will be most comfortable for you when using the oven.*

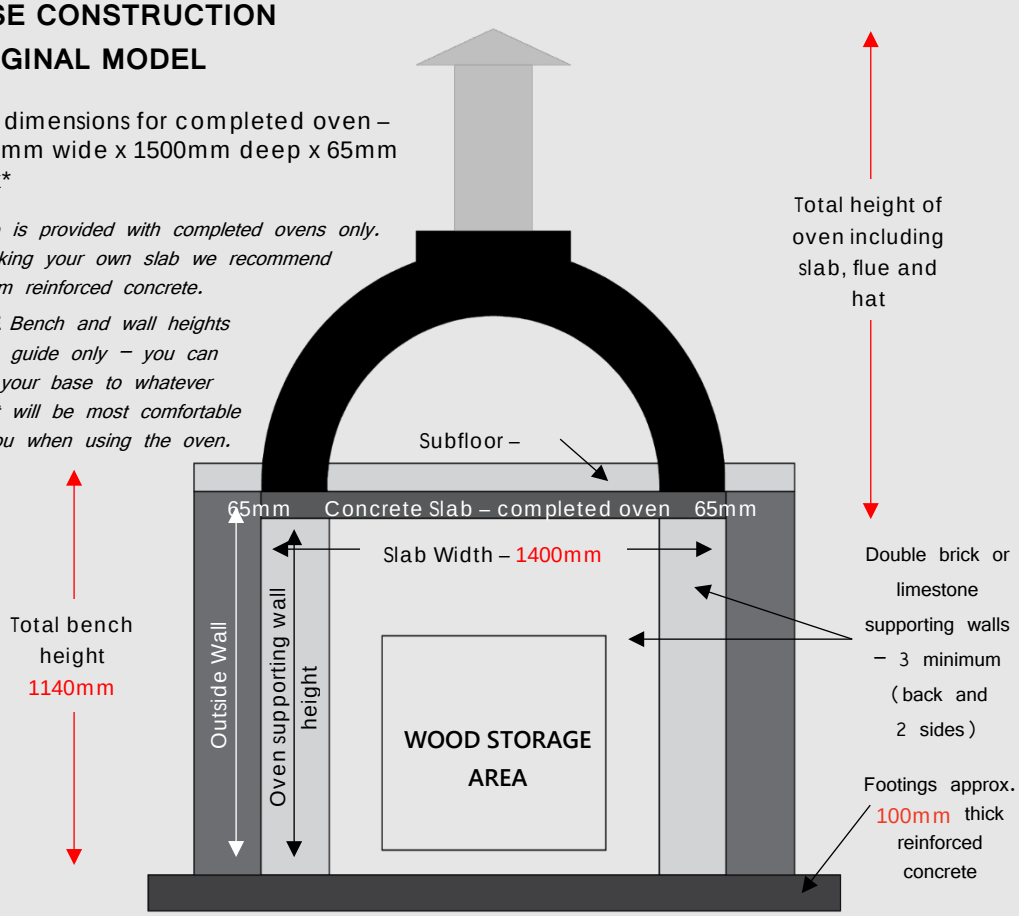

NOTE *The aim is to have the benchtop level with the oven floor. Therefore the outside wall should be total bench height less thickness of whatever you are using to finish your benchtop eg. tile thickness.*

© The Alfresco Factory 2017